Lab & Homework OPAMP Application 001

1. ´ÙÀ½ °¢È¸ ·Î¸ ¦ ½Ã¹Ä·¹ÀÌ¼ÇÇÏ¿© Àü´ÞÇÔ¼ö¸ ¦ ±¸ ÇÏ¶ó?

2. ´ÙÀ½ °¢È¸ ·Î¸ ¦ Manual Analysis ÇÏ¶ó?
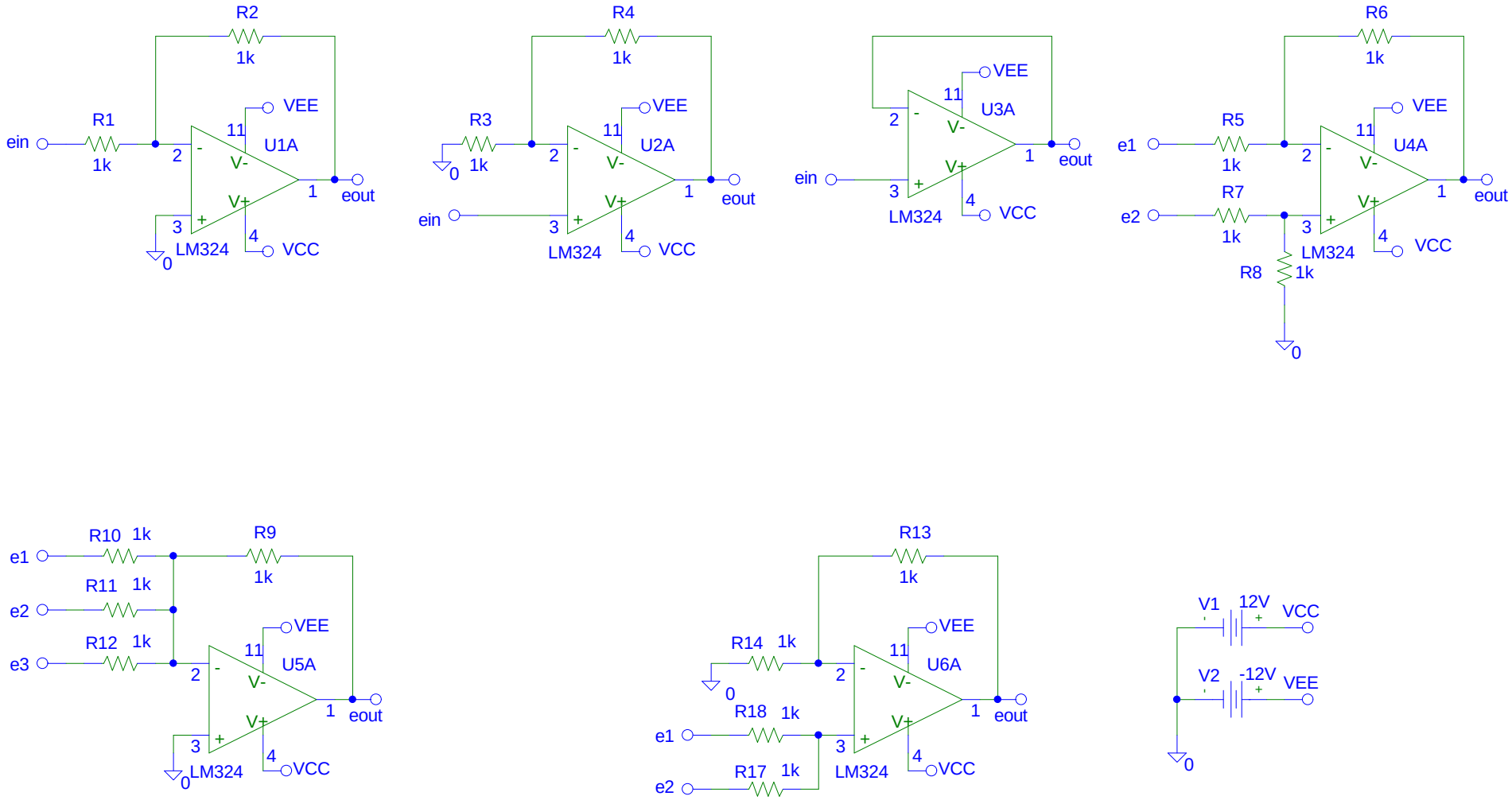
3. ´ÙÀ½ °¢È¸ ·Î¸ ¦ Á¦ÀÛÇÏ¿© 1°ú 2ÀÇ °á°ú¿Í °ËÁõÇÏ¶ó?